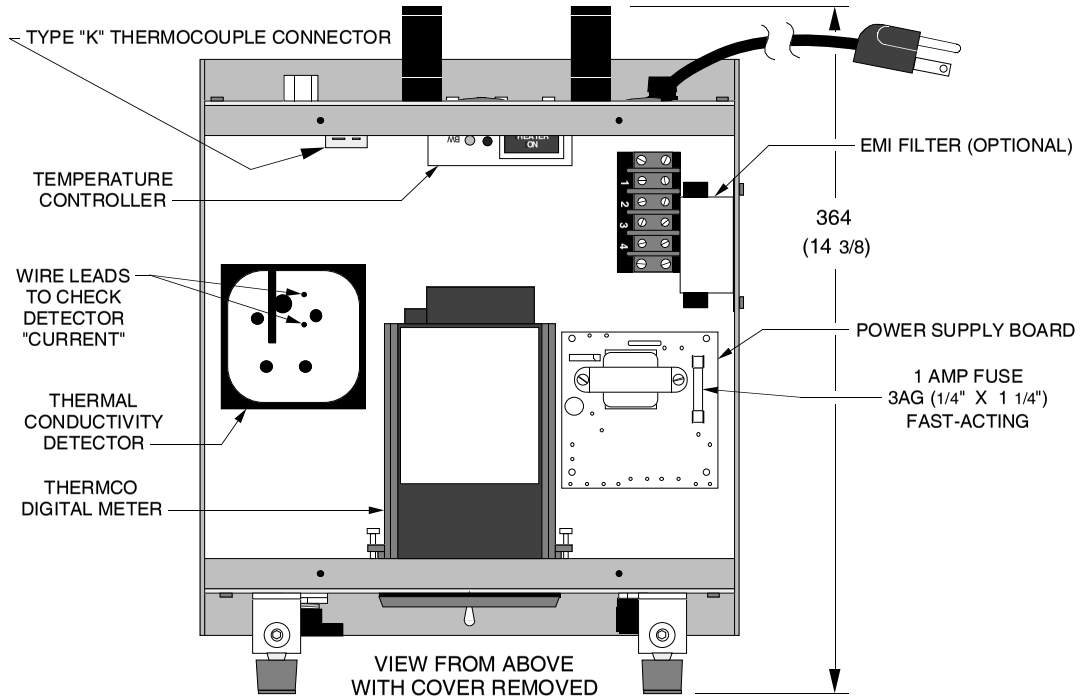

VIEW FROM ABOVE
WITH COVER REMOVED

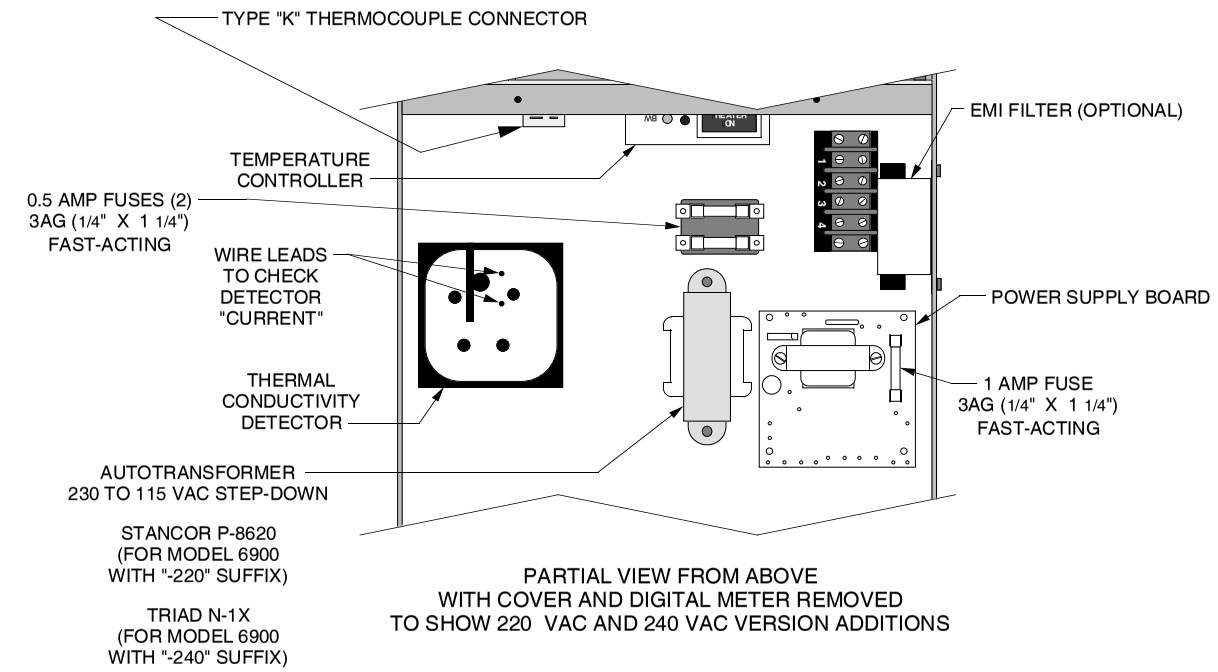

PARTIAL VIEW FROM ABOVE
WITH COVER AND DIGITAL METER REMOVED
TO SHOW 220 VAC AND 240 VAC VERSION ADDITIONS

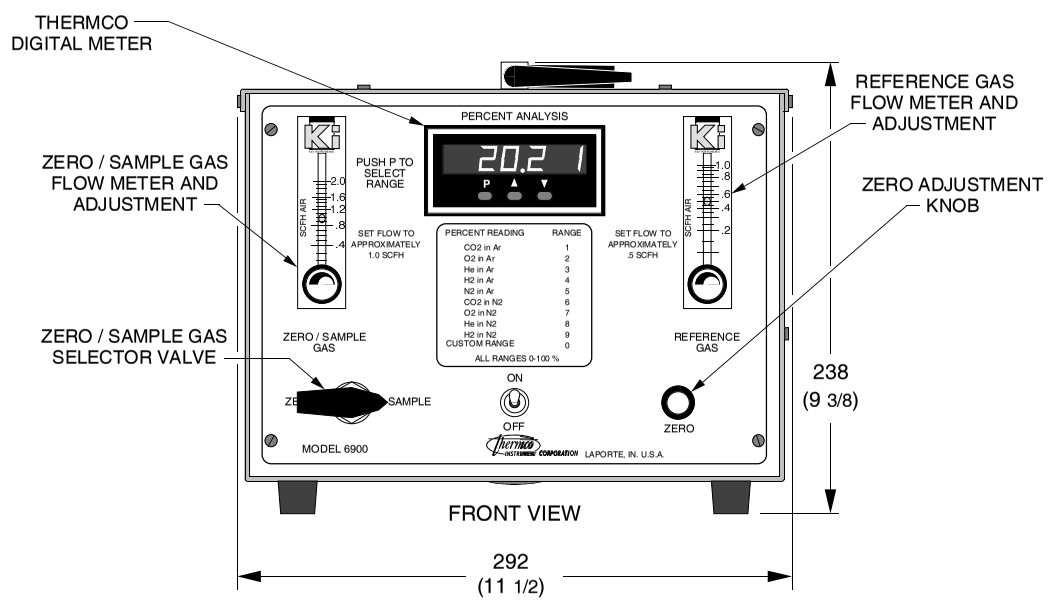

FRONT VIEW

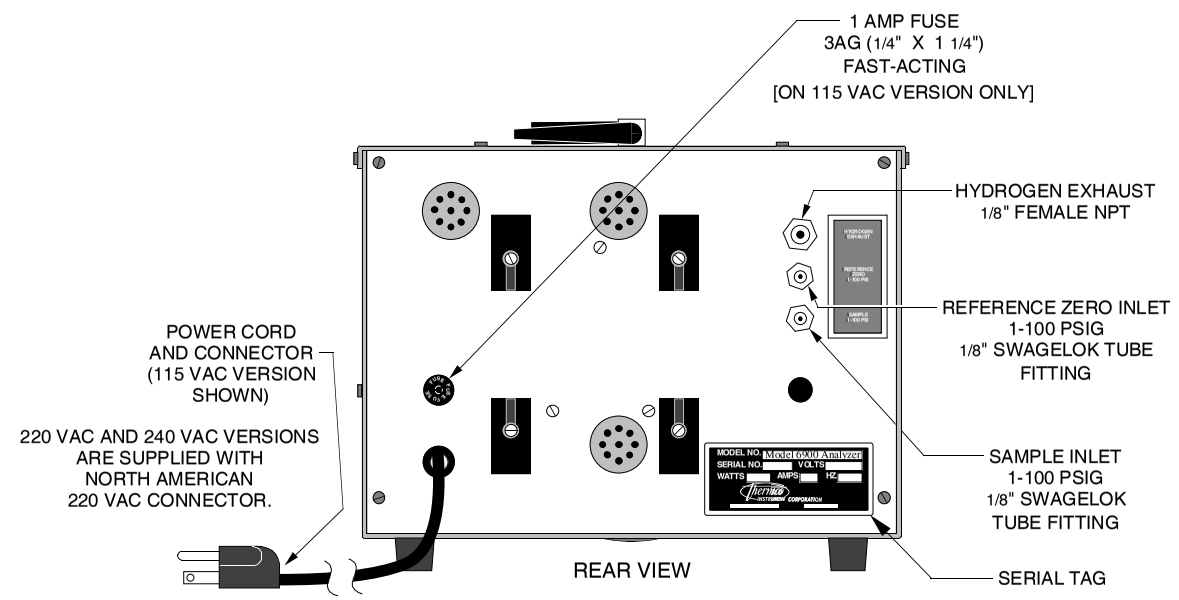

REAR VIEW

NOTES:

DURING OPERATION, ANALYZER MUST BE IN THE UPRIGHT ORIENTATION AS SHOWN.

DO NOT BLOCK BOTTOM VENTILATION ACCESS OF ANALYZER BELOW THE FEET.

DIMENSIONS ARE APPROXIMATE MILLIMETERS (INCHES)

	REVISIONS	BY	DATE
H			
G			
F			
E			
D			
C			
B			
A			

Thermco® INSTRUMENT CORPORATION
LA PORTE, INDIANA USA

TITLE:

INSTRUCTION DRAWING FOR
MODEL 6900 ANALYZER

DATE: 6-29-06
SCALE: N.T.S.
DRAWN BY: DB
APPROVED BY:
SUPERSEDES: 1-10926
DRAWING NUMBER: 2-12664