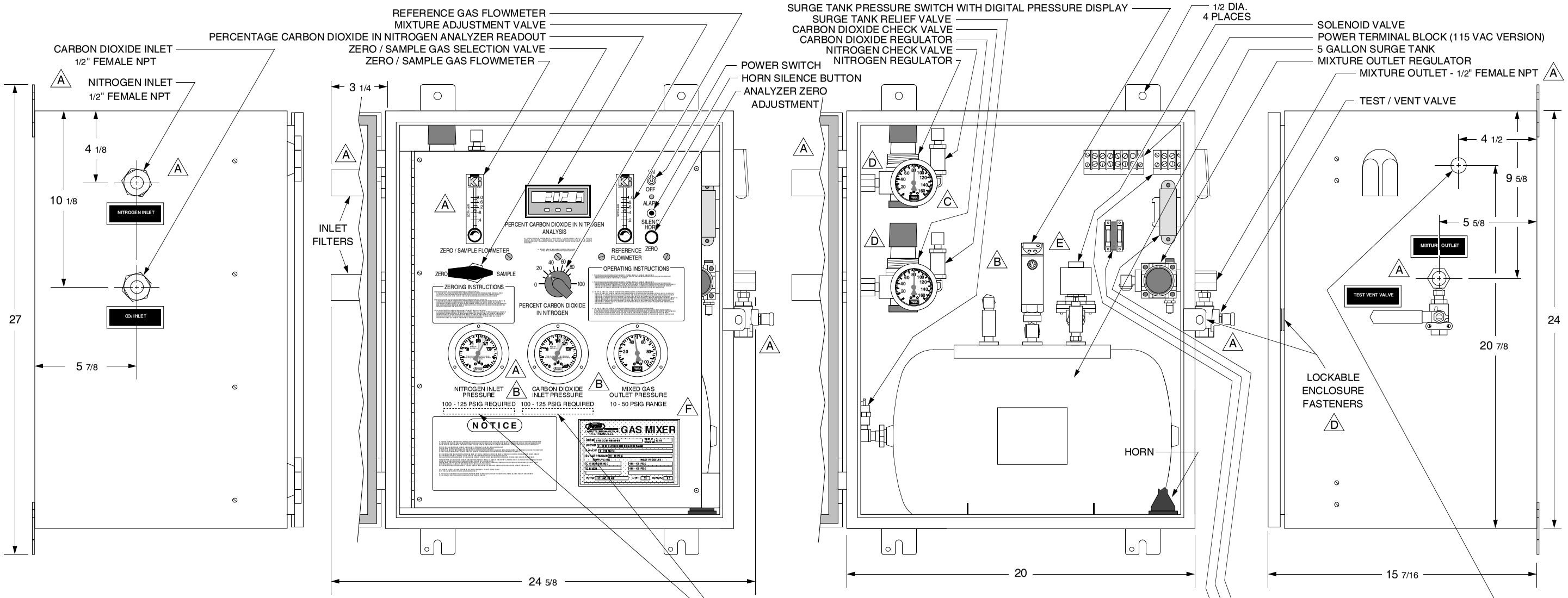


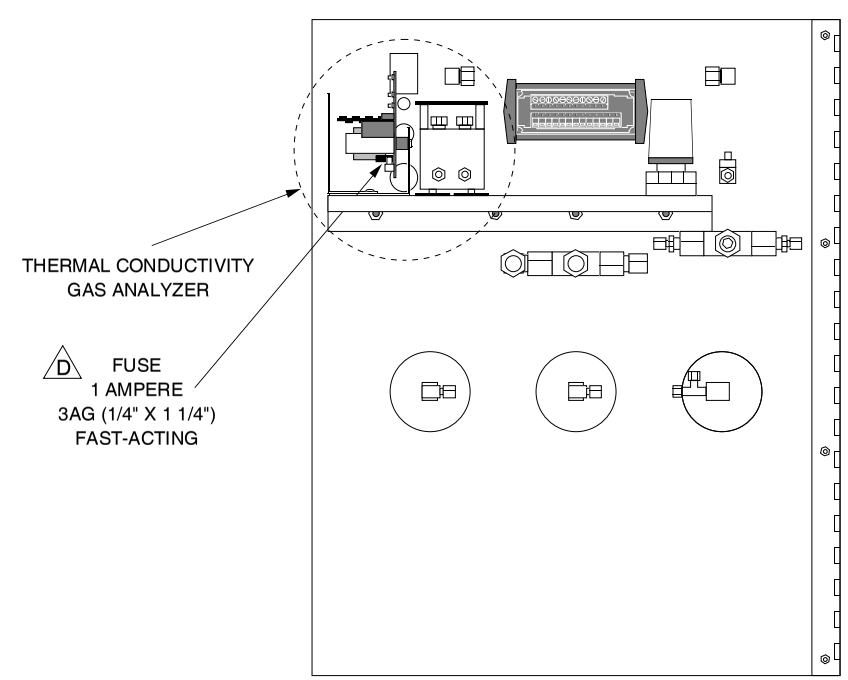


VIEW OF BACK OF INNER PANEL
SHOWING ANALYZER

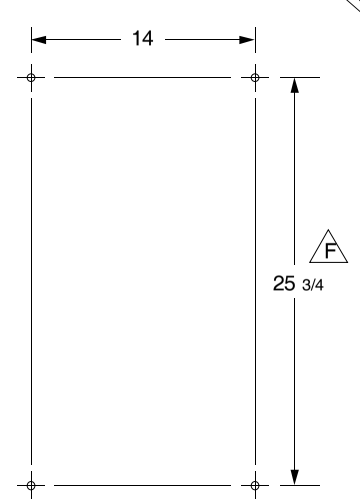


DIMENSIONS FOR MOUNTING

NOTES:

1. MIXER MUST BE MOUNTED IN VERTICAL POSITION.
2. ALL DIMENSIONS IN INCHES UNLESS OTHERWISE NOTED. DIMENSIONS ARE APPROXIMATE.
3. STANDARD OPERATING PRESSURES ARE SHOWN. CONSULT DATA SHEET FOR ACTUAL OPERATING PRESSURES.

| | REVISIONS | BY | DATE |
|---|---|---|---|
| F | CHANGED TO NEW ENCLOSURE; NEW SPEC TAG; MINOR TEXT CHANGES TO PANEL | GAR | 5-18-04 |
| E | CHANGED TO IFM EFECTOR PRESSURE SWITCH | DMR | 12-12-02 |
| D | CO2 FLOW TRAIN HAD HEX NIPPLE; GAUGES WERE 0-100; ADDED LOCKABLE CLOSURE; ADDED FUSE INFO; ADDED LABEL INFO; ADDED 220 VAC ITEMS | GAR | 6-10-02 |
| C | CHECK VALVES WERE UPSTREAM OF REGULATORS | DMR | 12-4-98 |
| B | CHANGED TO WIKA GAUGES, TANK PRESSURE GAUGE MOVED | GAR | 3-19-98 |
| A | CHANGED TEST / VENT VALVE TO APOLLO BALL VALVE AND MOVED LABELS, ADDED LIMIT MARKS TO INLET PRESSURE GAUGES, REMOVED PIPE PLUG ON NITROGEN INLET FILTER, CHANGED FROM DWYER FLOWMETERS TO KEY INSTRUMENTS, ADDED DIMENSIONAL INFO, ADDED POWER CONNECTION INFO, ADDED NOTES, ADDED FITTING SIZES | GAR | 9-21-95 |

THERMCO INSTRUMENT CORPORATION

| | | |
|---|---|---|
| SCALE: N.T.S. | B. M. NUMBER: | DRAWN BY: DB |
| DATE: 4-6-94 | CUSTOMER: | APPROVED BY: |
| S. O. NUMBER: | | SUPERSEDES: 4-10237 |
| TITLE: INSTRUCTION DRAWING FOR MODEL 8525 GAS MIXER | | DRAWING NUMBER: 2-10794 |