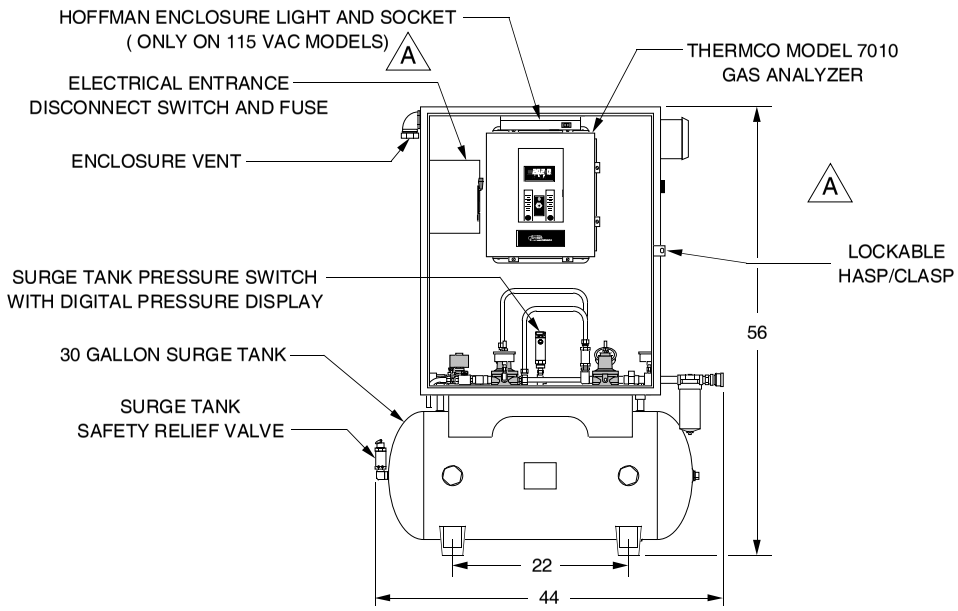

FRONT VIEW
(DOOR REMOVED)

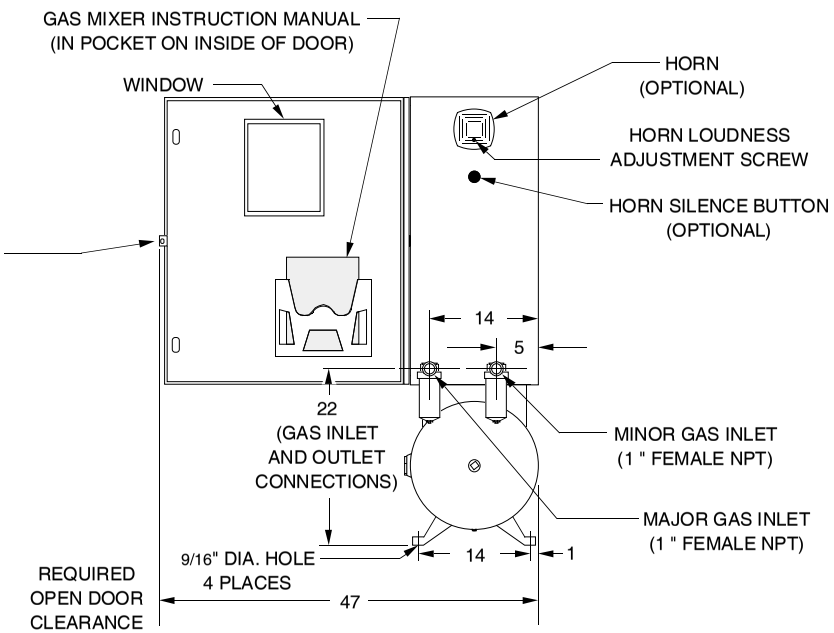

RIGHT SIDE VIEW

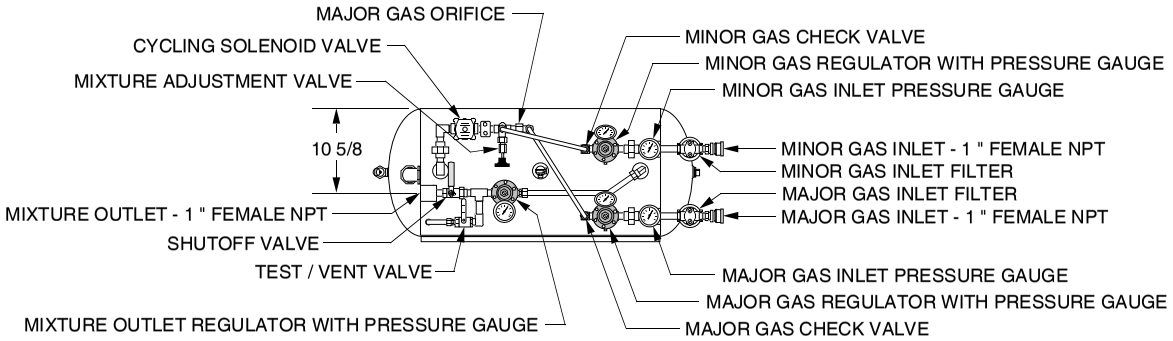

TOP VIEW
(TOP REMOVED,
ANALYZER AND HORN
NOT SHOWN)

DIMENSIONS ARE IN INCHES AND ARE APPROXIMATE

	REVISIONS	BY	DATE
G			
F			
E			
D			
C			
B			
A	ADDED 115 VAC NOTE; REMOVED CHECK VALVE INDICATOR FROM FRONT VIEW	DMR	3-14-03

THERMCO INSTRUMENT CORPORATION
LA PORTE, INDIANA USA

SCALE: N.T.S.	B. M. NO:	S. O. NO:	DRAWN BY: DB
DATE: 12-30-02	CUSTOMER:		APPROVED BY:
TITLE: INSTRUCTION DRAWING FOR MODEL 8105 GAS MIXER			SUPERSEDES:
			DRAWING NUMBER: 1-12177