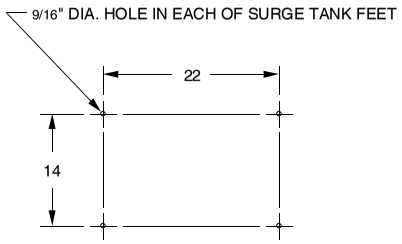

SURGE TANK FEET HOLE PATTERN

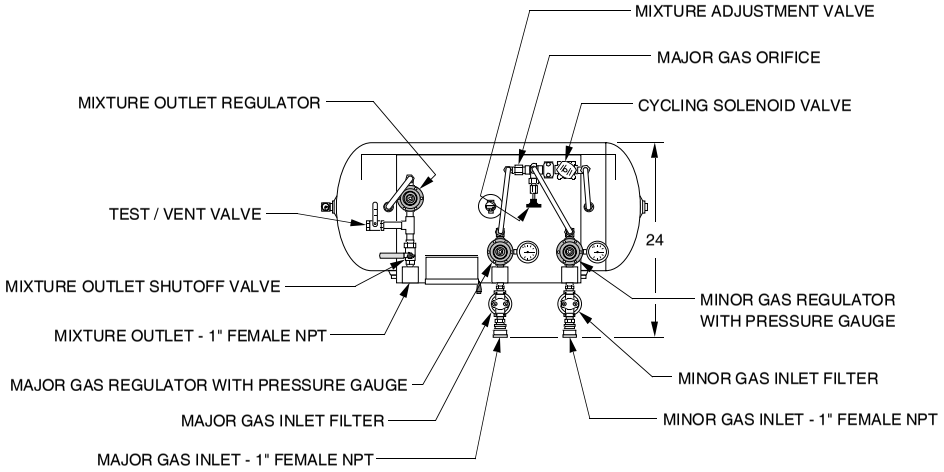

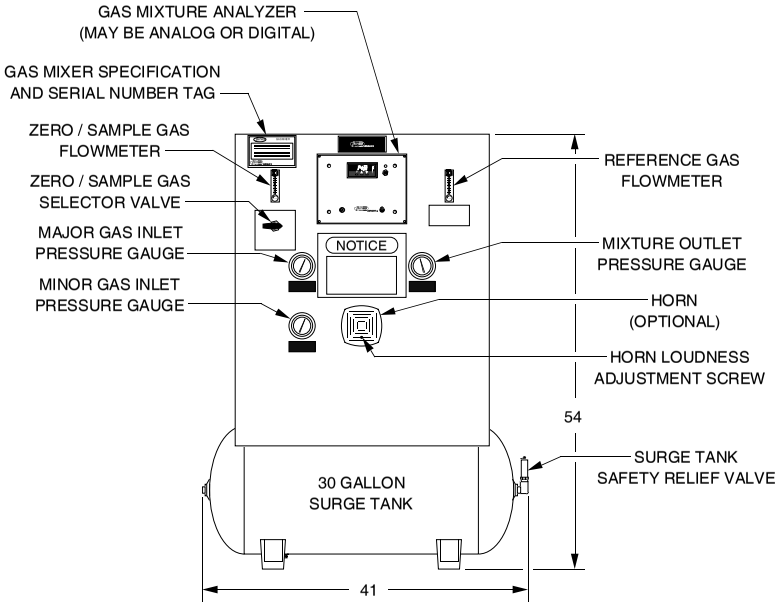

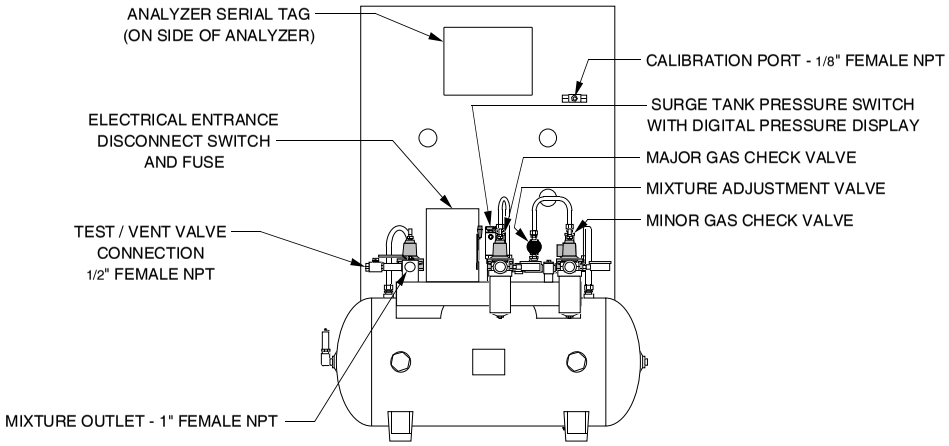

DIMENSIONS ARE IN INCHES AND ARE APPROXIMATE.

	REVISIONS	BY	DATE
H			
G			
F			
E			
D			
C			
B			
A			

THERMCO INSTRUMENT CORPORATION
LA PORTE, INDIANA USA

SCALE: N.T.S.	B. M. NO:	S. O. NO:	DRAWN BY: DB
DATE: 12-16-02	CUSTOMER:		APPROVED BY:
TITLE: INSTRUCTION DRAWING FOR MODEL 6105 GAS MIXER WITH 7130 OR 9235 GAS ANALYZER			SUPERSEDES:
			DRAWING NUMBER: 1-12163